DAN DRYER A/S

AirTap Warm-air Hand Dryer 370

IR sensor
Deck-mounted
Stainless Steel with satin finish
2-year warranty

DAN DRYER AirTap features a minimalist, modern design in stainless steel with satin finish. The intelligent temperature control technology detects the room temperature and adjusts the heating element.

Application
DAN DRYER AirTap is a powerful hand dryer suitable for toilet rooms with a high visitor frequency. With its elegant slim design, the hand dryer is the perfect choice for all kinds of commercial washrooms. The DAN DRYER Tap range is an ideal build-in solution for construction projects and automatic hand wash stations.

References
Shopping centres, restaurants, hotels, airports, sports facilities, schools and public institutions.

Technical data

Type	DAN DRYER AirTap Prod. No.: 370 Touch-less warm-air hand dryer with IR sensor
Dimensions tap	H 170 x W 50 x D 220 mm
Dimensions motor	H 203 x W 306 X D 150 mm
Material	Stainless steel, satin finish
Drying cycle	10-15 sec.
Connection	220 V -240 V, 50/60 Hz, Class I
Total wattage	600-1000 W
Heating element	100-500 W
Motor	500 W
Noise level	68.5-70.5 dBA
Max. air capacity	84-101 m/sec.
Max. air outlet temperature	57° C
Net weight	6.0 kg
IP rating	IP35

Standard colour
Stainless steel, satin finish

Activation
Infrared sensor and electronic timer. Touch-free. Activation distance adjustable 130 mm (± 20 mm). Automatic stop after 60 seconds of continuous use.

Motor type
Commutator motor with carbon brushes. 22,000-29,000 revolutions/min.

Protection
Automatic thermal cut-out in both motor and heating element.

Installation
Machine intended for table top mounting. Connection to fixed installation or via circuit-breaker. Installation must be carried out by a qualified electrician.

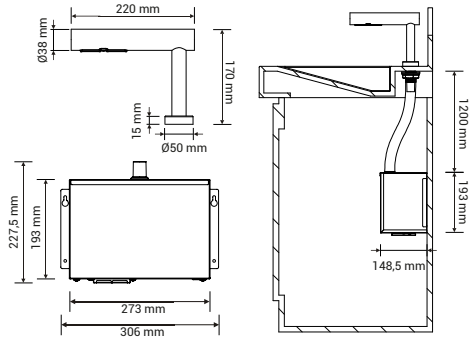

Tender text
Touch-less hand dryer in stainless steel with satin finish for deck mounting. Infra-red sensor and electronic timer, drying cycle: 10-15 sec. IP35, 230 V, 50/60 Hz, 1000 W, Class I (earthed). 68.5-70.5 dBA.
Net weight: 6.0 kg. H: 170 mm, W: 50 mm, D: 220 mm.

Approval
UL, CE, GS, BSMI, EMC, LVD, WEEE, RoHS, UKCA